GP20-35UX SERIES

INTERNAL COMBUSTION COUNTERBALANCE FORKLIFT

TECHNICAL SPECIFICATIONS

Yale LIFT TRUCK TECHNOLOGIES

A7S1 V1.0 04 August 2026

DIAGRAM

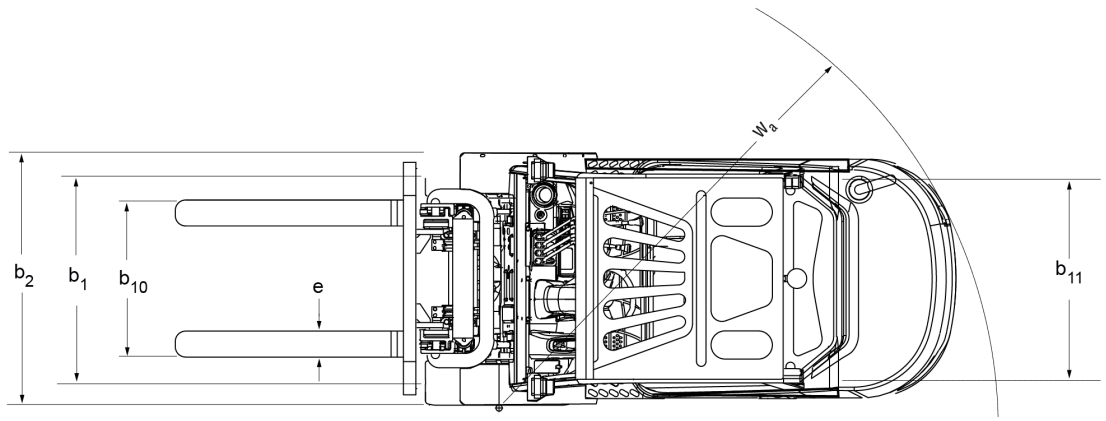

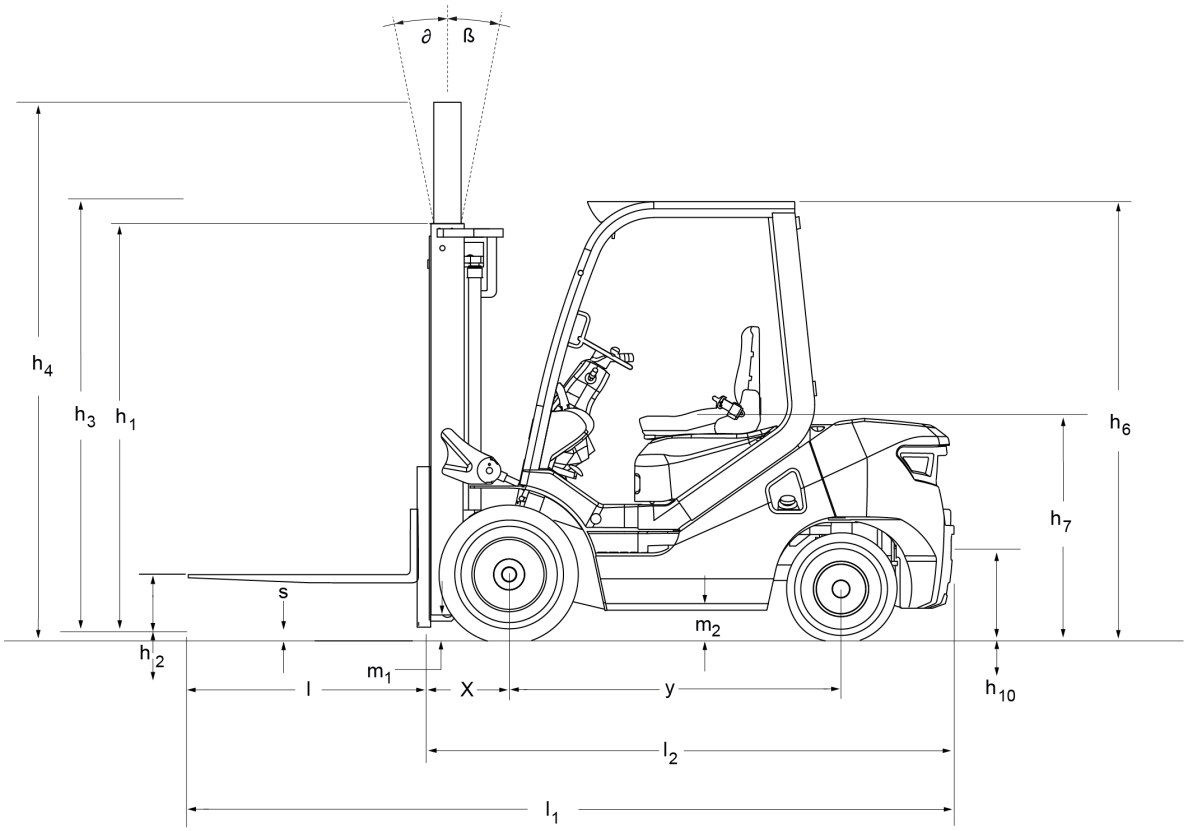

Specifications Table GP20UX

	1.2	MODEL DESIGNATION		GP20UX	GP20UX	GP20UX	GDP20UX
General	1.1	Manufacturer		Yale	Yale	Yale	Yale
	1.2.1	Engine		Yanmar 2.6L	Yanmar 2.2L	Yanmar 2.2L	Xinchai 2.67L
	1.2.2	CE compliance / Emission standards		non-certified	non-certified	non-certified	non-certified
	1.3	Drive: electric(battery or mains), diesel, petrol, fuel gas		DIESEL	LPG	BI-FUEL	DIESEL
	1.4	Operator type: hand, pedestrian, standing, seated, order-picker		Seated	Seated	Seated	Seated
	1.5	Rated capacity/rated load	Q (kg)	2000	2000	2000	2000
	1.6	Load Center Distance	c (mm)	500	500	500	500
	1.8	Load Face - Fork Face STD Carriage (mm)	x (mm)	475	475	475	475
	1.9	Wheelbase (mm)	y (mm)	1600	1600	1600	1600
Weight	2.1	Service weight	kg	3390	3390	3390	3390
	2.2	Axle loading, laden front/rear	kg	4760 / 630	4760 / 630	4760 / 630	4760
	2.3	Axle loading, unladen front/rear	kg	1540 / 1850	1540 / 1850	1540 / 1850	1540
Wheels	3.1	Tyres: L = pneumatic, V = cushion, SE = superelastic		L	L	L	L
	3.2	Tire Size, Front		7.00-12-12PR	7.00-12-12PR	7.00-12-12PR	7.00-12-12PR
	3.3	Tire Size, Rear		6.00-9-10PR	6.00-9-10PR	6.00-9-10PR	6.00-9-10PR
	3.5	Wheels, Number Front/Rear (x=drive wheels)		2X/2	2X/2	2X/2	2X/2
	3.6	Standard Tread Width, Front (mm)	b10 (mm)	970	970	970	970
	3.7	Standard Tread Width, Rear (mm)	b11 (mm)	980	980	980	980
Dimensions	4.1	Tilt of mast/fork carriage, forward /backward	α /β (°)	6/ 12	6/ 12	6/ 12	6/ 12
	4.2	2LFL Mast Lowered (mm)	h1 (mm)	2010	2010	2010	2010
	4.3	2LFL Free Lift - BOF (mm)	h2 (mm)	160	160	160	160
	4.4	2LFL Lift - BOF (mm)	h3 (mm)	3000	3000	3000	3000
	4.5.1	Height Mast Extended w/o LBR (mm)	h4 (mm)	3575	3575	3575	3575
	4.7	Height of overhead guard (high/low)	h6 (mm)	2180	2180	2180	2180
	4.7.1	Height of Enclosed Cab (mm)	mm	2205	2205	2205	2205
	4.8	Seat height/stand height(SIP from Ground - Standard (mm))	h7 (mm)	1167	1167	1167	1167
	4.12	Coupling Height from Ground (mm)	h10 (mm)	250	250	250	250
	4.19	Overall Length (mm)	l1 (mm)	3630	3630	3630	3630
	4.20	Length to Face of Forks Standard Carriage (mm)	l2 (mm)	2560	2560	2560	2560
	4.21	Overall Width STD Tire (mm)	b1 (mm)	1150	1150	1150	1150
	4.21.1	Overall Width Dual Tire (mm)		1590	1590	1590	1590
	4.22	04.2201 - Fork Thickness	s(mm)	40	40	40	40
	4.22	04.2202 - Fork Width	e(mm)	122	122	122	IIA
	4.22	04.2203 - ForkLength	l(mm)	1070	1070	1070	1040
	4.23	Fork carriage ISO 2328. Class/type, A/B		IIA	IIA	IIA	125
	4.24	Fork Carriage Width	b3 (mm)	1040	1040	1040	150
	4.31	Ground clearance, laden, below mast	m1 (mm)	125	125	125	3966
	4.32	Ground clearance, centre of wheelbase	m2 (mm)	150	150	150	3766

	1.2	MODEL DESIGNATION		GP20UX	GP20UX	GP20UX	GDP20UX
	4.34.1	Aisle width with pallets 1000mm x 1200mm crossways (l6 x b12)	Ast (mm)	3966	3966	3966	2290
	4.34.2	Aisle width with pallets 800mm x 1200mm crossways (l6 x b12)	Ast (mm)	3766	3766	3766	745
	4.35	04.3500 - Outside Turning Radius	Wa (mm)	2290	2290	2290	19/19
	4.36	04.3600 - Internal Turing Radius	b13 (mm)	745	745	745	0.54/0.57
Performance	5.1	Travel speed, laden/unladen	km/h	19/19	18/18	18/18	0.43/0.40
	5.2	Lifting speed, laden/unladen,2LFL	mm/s	0.54/0.57	0.49/0.52	0.49/0.52	18400/18400
	5.3	Lowering speed laden/unladen, 2LFL	mm/s	0.43/0.40	0.43/0.40	0.43/0.40	24/26
	5.5	Maximum drawbar pull with/without load	N	12774/8761	23950/22100	22055/20350	20/25
	5.7.2	Gradeability with/without load @ 4.8km/h	%	18/22.4	25/25	25/25	4.5/4.4
	5.8	Max Gradeability Lade/Unladen	%	26/27	35/35	35/35	Hydraulic
	5.9.1	Acceleration Time Laden/Unladen 15m	s	4.6/4.5	tbc	tbc	Xinchai 2.67L
	5.10	Service Brake		Hydraulic	Hydraulic	Hydraulic	36,8
Combustion Engine	7.1	Engine		Yanmar 2.6L	Yanmar 4TN88GN-NHYM	Yanmar 4TN88BN-NHYM	2500
	7.2	Engine Power	Kw	32,8	41,7	LPG：38.9/GAS：38.7	4 / 2670
	7.3	Rated Speed	min-1	2450	2500	2500	tbc
	7.4	Number of cylinders	n/cm3	4 / 2659	4 / 2189	4 / 2189	0-175
	7.5	Fuel Consumption according to VDI cycle	kg/h	2,6	tbc	tbc	64
Additional Data	10.1	Operating Pressure of Attachments	bar	0-175	0-175	0-175	60
	10.2	Oil Volume Flow for Attachements	ℓ/min	64	64	64	60
	10.3	Hydraulic Oil Tank Capacity - Initial Fill	ℓ	60	60	60	84
	10.4.2	Fuel Tank Capacity	ℓ	60	60	60	PIN
	10.7.1	Sound Pressure at Driver's Ear OHG	dBa	84	tbc	tbc	
	10.8	Towing Couple Type		PIN	PIN	PIN	

(4.5.1) Without load backrest.
(4.7) h6 subject to +/- 5mm tolerance.
(4.8) Full suspension seat in depressed position.
(4.24) Add 32mm with load backrest.
(10.2) Variable.
(10.7.1) LPAZ, measured according to the test cycles and based on the weighting values contained in EN12053. Specification data is based on VDI 2198, with the following configuration: Complete truck with 3000mm 2-stage limited free lift mast, standard carriage and 1070mm forks, overhead guard and standard pneumatic drive and steer tyres.

Specifications Table GP25UX

	1.2	MODEL DESIGNATION		GP25UX	GP25UX	GP25UX	GDP25UX
General	1.1	Manufacturer		Yale	Yale	Yale	Yale
	1.2.1	Engine		Yanmar 2.6L	Yanmar 2.2L	Yanmar 2.2L	Xinchai 2.67L
	1.2.2	CE compliance / Emission standards		non-certified	non-certified	non-certified	non-certified
	1.3	Drive: electric(battery or mains), diesel, petrol, fuel gas		DIESEL	LPG	BI-FUEL	DIESEL
	1.4	Operator type: hand, pedestrian, standing, seated, order-picker		Seated	Seated	Seated	Seated
	1.5	Rated capacity/rated load	Q (kg)	2500	2500	2500	2500
	1.6	Load Center Distance	c (mm)	500	500	500	500
	1.8	Load Face - Fork Face STD Carriage (mm)	x (mm)	475	475	475	475
	1.9	Wheelbase (mm)	y (mm)	1600	1600	1600	1600
Weight	2.1	Service weight	kg	3650	3650	3650	3650

	1.2	MODEL DESIGNATION		GP25UX	GP25UX	GP25UX	GDP25UX
	2.2	Axle loading, laden front/rear	kg	5320 / 650	5320 / 650	5400 / 650	5400
	2.3	Axle loading, unladen front/rear	kg	1500 / 2150	1500 / 2150	1500 / 2150	1500
Wheels	3.1	Tyres: L = pneumatic, V = cushion, SE = superelastic		L	L	L	L
	3.2	Tire Size, Front		7.00-12-12PR	7.00-12-12PR	7.00-12-12PR	7.00-12-12PR
	3.3	Tire Size, Rear		6.00-9-10PR	6.00-9-10PR	6.00-9-10PR	6.00-9-10PR
	3.5	Wheels, Number Front/Rear (x=drive wheels)		2X/2	2X/2	2X/2	2X/2
	3.6	Standard Tread Width, Front (mm)	b10 (mm)	970	970	970	970
	3.7	Standard Tread Width, Rear (mm)	b11 (mm)	980	980	980	980
Dimensions	4.1	Tilt of mast/fork carriage, forward /backward	α /β (°)	6/ 12	6/ 12	6/ 12	6/ 12
	4.2	2LFL Mast Lowered (mm)	h1 (mm)	2010	2010	2010	2010
	4.3	2LFL Free Lift - BOF (mm)	h2 (mm)	160	160	160	160
	4.4	2LFL Lift - BOF (mm)	h3 (mm)	3000	3000	3000	3000
	4.5.1	Height Mast Extended w/o LBR (mm)	h4 (mm)	3575	3575	3575	3575
	4.7	Height of overhead guard (high/low)	h6 (mm)	2180	2180	2180	2180
	4.7.1	Height of Enclosed Cab (mm)	mm	2205	2205	2205	2205
	4.8	Seat height/stand height(SIP from Ground - Standard (mm))	h7 (mm)	1167	1167	1167	1167
	4.12	Coupling Height from Ground (mm)	h10 (mm)	250	250	250	250
	4.19	Overall Length (mm)	l1 (mm)	3690	3690	3690	3690
	4.20	Length to Face of Forks Standard Carriage (mm)	l2 (mm)	2620	2620	2620	2620
	4.21	Overall Width STD Tire (mm)	b1 (mm)	1150	1150	1150	1150
	4.21.1	Overall Width Dual Tire (mm)		1590	1590	1590	1590
	4.22	04.2201 - Fork Thickness	s(mm)	40	40	40	40
	4.22	04.2202 - Fork Width	e(mm)	122	122	122	IIA
	4.22	04.2203 - ForkLength	l(mm)	1070	1070	1070	1040
	4.23	Fork carriage ISO 2328. Class/type, A/B		IIA	IIA	IIA	125
	4.24	Fork Carriage Width	b3 (mm)	1040	1040	1040	150
	4.31	Ground clearance, laden, below mast	m1 (mm)	125	125	125	4026
	4.32	Ground clearance, centre of wheelbase	m2 (mm)	150	150	150	3826
	4.34.1	Aisle width with pallets 1000mm x 1200mm crossways (l6 x b12)	Ast (mm)	4026	4026	4026	2350
	4.34.2	Aisle width with pallets 800mm x 1200mm crossways (l6 x b12)	Ast (mm)	3826	3826	3826	745
	4.35	04.3500 - Outside Turning Radius	Wa (mm)	2350	2350	2350	19/19
	4.36	04.3600 - Internal Turing Radius	b13 (mm)	745	745	745	0.56/0.59
Performance	5.1	Travel speed, laden/unladen	km/h	19/19	18/18	18/18	0.45/0.42
	5.2	Lifting speed, laden/unladen,2LFL	mm/s	0.56/0.61	0.49/0.52	0.49/0.52	18400/18400
	5.3	Lowering speed laden/unladen, 2LFL	mm/s	0.45/0.41	0.43/0.40	0.43/0.40	25/25
	5.5	Maximum drawbar pull with/without load	N	12648/8450	23950/22100	22055/20350	18/25
	5.7.2	Gradeability with/without load @ 4.8km/h	%	15/19.5	20/20	20/20	4.6/4.5
	5.8	Max Gradeability Lade/Unladen	%	22/26	30/30	30/30	Hydraulic
	5.9.1	Acceleration Time Laden/Unladen 15m	s	4.7/4.6	tbc	tbc	Xinchai 2.67L
	5.10	Service Brake		Hydraulic	Hydraulic	Hydraulic	36,8
Combustion Engine	7.1	Engine		Yanmar 2.6L	Yanmar 4TN88GN-NHYM	Yanmar 4TN88BN-NHYM	2500
	7.2	Engine Power	Kw	32,8	41,7	LPG：38.9/GAS：38.7	4 / 2670
	7.3	Rated Speed	min-1	2450	2500	2500	3,32
	7.4	Number of cylinders	n/cm3	4 / 2659	4 / 2189	4 / 2189	0-175
	7.5	Fuel Consumption according to VDI cycle	kg/h	3,64	tbc	tbc	64

	1.2	MODEL DESIGNATION		GP25UX	GP25UX	GP25UX	GDP25UX
Additional Data	10.1	Operating Pressure of Attachments	bar	0-175	0-175	0-175	60
	10.2	Oil Volume Flow for Attachements	ℓ/min	64	64	64	60
	10.3	Hydraulic Oil Tank Capacity - Initial Fill	ℓ	60	60	60	87,9
	10.4.2	Fuel Tank Capacity	ℓ	60	60	60	PIN
	10.7.1	Sound Pressure at Driver's Ear OHG	dBa	84,7	tbc	tbc	
	10.8	Towing Couple Type		PIN	PIN	PIN	

(4.5.1) Without load backrest.
(4.7) h6 subject to +/- 5mm tolerance.
(4.8) Full suspension seat in depressed position.
(4.24) Add 32mm with load backrest.
(10.2) Variable.
(10.7.1) LPAZ, measured according to the test cycles and based on the weighting values contained in EN12053. Specification data is based on VDI 2198, with the following configuration: Complete truck with 3000mm 2-stage limited free lift mast, standard carriage and 1070mm forks, overhead guard and standard pneumatic drive and steer tyres.

Specifications Table GP30UX

	1.2	MODEL DESIGNATION		GP30UX	GP30UX	GP30UX	GP30UX	GDP30UX
General	1.1	Manufacturer		Yale	Yale	Yale	Yale	Yale
	1.2.1	Engine		Yanmar 3.0L	Yanmar 3.3L	Yanmar 2.2L	Yanmar 2.2L	Xinchai 2.67L
	1.2.2	CE compliance / Emission standards		non-certified	non-certified	non-certified	non-certified	non-certified
	1.3	Drive: electric(battery or mains), diesel, petrol, fuel gas		DIESEL	DIESEL	LPG	Bi-Fuel	DIESEL
	1.4	Operator type: hand, pedestrian, standing, seated, order-picker		Seated	Seated	Seated	Seated	Seated
	1.5	Rated capacity/rated load	Q (kg)	3000	3000	3000	3000	3000
	1.6	Load Center Distance	c (mm)	500	500	500	500	500
	1.8	Load Face - Fork Face STD Carriage (mm)	x (mm)	490	490	490	490	490
	1.9	Wheelbase (mm)	y (mm)	1700	1700	1700	1700	1700
Weight	2.1	Service weight	kg	4300	4300	4300	4300	4300
	2.2	Axle loading, laden front/rear	kg	6490 / 770	6490 / 810	6490 / 810	6490 / 810	6490
	2.3	Axle loading, unladen front/rear	kg	1710 / 2590	1710 / 2590	1710 / 2590	1710 / 2590	1710
Wheels	3.1	Tyres: L = pneumatic, V = cushion, SE = superelastic		L	L	L	L	L
	3.2	Tire Size, Front		28x9-15-14PR	28x9-15-14PR	28x9-15-14PR	28x9-15-14PR	28x9-15-14PR
	3.3	Tire Size, Rear		6.50-10-10PR	6.50-10-10PR	6.50-10-10PR	6.50-10-10PR	6.50-10-10PR
	3.5	Wheels, Number Front/Rear (x=drive wheels)		2X/2	2X/2	2X/2	2X/2	2X/2
	3.6	Standard Tread Width, Front (mm)	b10 (mm)	1000	1000	1000	1000	1000
	3.7	Standard Tread Width, Rear (mm)	b11 (mm)	970	970	970	970	970
Dimensions	4.1	Tilt of mast/fork carriage, forward /backward	α /β (°)	6/ 12	6/ 12	6/ 12	6/ 12	6/ 12
	4.2	2LFL Mast Lowered (mm)	h1 (mm)	2075	2075	2075	2075	2075
	4.3	2LFL Free Lift - BOF (mm)	h2 (mm)	165	165	165	165	165
	4.4	2LFL Lift - BOF (mm)	h3 (mm)	3000	3000	3000	3000	3000
	4.5.1	Height Mast Extended w/o LBR (mm)	h4 (mm)	3640	3640	3640	3640	3640
	4.7	Height of overhead guard (high/low)	h6 (mm)	2205	2205	2205	2205	2205
	4.7.1	Height of Enclosed Cab (mm)	mm	2230	2230	2230	2230	2230
	4.8	Seat height/stand height(SIP from Ground - Standard (mm))	h7 (mm)	1192	1192	1192	1192	1192
	4.12	Coupling Height from Ground (mm)	h10 (mm)	260	260	260	260	260

	1.2	MODEL DESIGNATION		GP30UX	GP30UX	GP30UX	GP30UX	GDP30UX
	4.19	Overall Length (mm)	l1 (mm)	3765	3765	3765	3765	3765
	4.20	Length to Face of Forks Standard Carriage (mm)	l2 (mm)	2695	2695	2695	2695	2695
	4.21	Overall Width STD Tire (mm)	b1 (mm)	1210	1210	1210	1210	1210
	4.21.1	Overall Width Dual Tire (mm)		1650	1650	1650	1650	1650
	4.22	04.2201 - Fork Thickness	s(mm)	45	45	45	45	45
	4.22	04.2202 - Fork Width	e(mm)	122	122	122	122	IIIA
	4.22	04.2203 - ForkLength	l(mm)	1070	1070	1070	1070	1100
	4.23	Fork carriage ISO 2328. Class/type, A/B		IIIA	IIIA	IIIA	IIIA	140
	4.24	Fork Carriage Width	b3 (mm)	1100	1100	1100	1100	170
	4.31	Ground clearance, laden, below mast	m1 (mm)	140	140	140	140	4126
	4.32	Ground clearance, centre of wheelbase	m2 (mm)	170	170	170	170	3926
	4.34.1	Aisle width with pallets 1000mm x 1200mm crossways (l6 x b12)	Ast (mm)	4126	4126	4126	4126	2430
	4.34.2	Aisle width with pallets 800mm x 1200mm crossways (l6 x b12)	Ast (mm)	3926	3926	3926	3926	830
	4.35	04.3500 - Outside Turning Radius	Wa (mm)	2430	2430	2430	2430	19/20
	4.36	04.3600 - Internal Turing Radius	b13 (mm)	830	830	830	830	0.42/0.45
Performance	5.1	Travel speed, laden/unladen	km/h	19/20	19/20	19/19	19/19	0.40/0.38
	5.2	Lifting speed, laden/unladen,2LFL	mm/s	0.46/0.49	0.42/0.45	0.4/0.43	0.4/0.43	17000/15000
	5.3	Lowering speed laden/unladen, 2LFL	mm/s	0.40/0.38	0.40/0.38	0.4/0.38	0.4/0.38	19/25
	5.5	Maximum drawbar pull with/without load	N	16094/9688	20596/14800 (16941 / 9688)	22710/20915	20910/19260	14/19
	5.7.2	Gradeability with/without load @ 4.8km/h	%	14/18	12.5/19	18/20	18/20	4.6/4.5
	5.8	Max Gradeability Lade/Unladen	%	20/25	tbc	24/25	24/25	Hydraulic
	5.9.1	Acceleration Time Laden/Unladen 15m	s	4.6/4.5	4.5/4.4	tbc	tbc	Xinchai 2.67L
	5.10	Service Brake		Hydraulic	Hydraulic	Hydraulic	Hydraulic	36,8
Combustion Engine	7.1	Engine		Yanmar 3.0L	Yanmar 3.3L	Yanmar 4TN88GN-NHYM	Yanmar 4TN88BN-NHYM	2500
	7.2	Engine Power	Kw	35,5	42,1	41,7	LPG：38.9/GAS：38.7	4 / 2670
	7.3	Rated Speed	min-1	2400	2300	2500	2500	tbc
	7.4	Number of cylinders	n/cm3	4 / 3054	4 / 3319	4 / 2189	4 / 2189	0-175
	7.5	Fuel Consumption according to VDI cycle	kg/h	4,6	4,06	tbc	tbc	64
Additional Data	10.1	Operating Pressure of Attachments	bar	0-175	0-175	0-175	0-175	70
	10.2	Oil Volume Flow for Attachements	ℓ/min	64	64	64	64	70
	10.3	Hydraulic Oil Tank Capacity - Initial Fill	ℓ	70	70	70	70	87,9
	10.4.2	Fuel Tank Capacity	ℓ	70	70	70	70	PIN
	10.7.1	Sound Pressure at Driver's Ear OHG	dBa	85	84	tbc	tbc	
	10.8	Towing Couple Type		PIN	PIN	PIN	PIN	

(4.5.1) Without load backrest.
(4.7) h6 subject to +/- 5mm tolerance.
(4.8) Full suspension seat in depressed position.
(4.24) Add 32mm with load backrest.
(10.2) Variable.
(10.7.1) LPAZ, measured according to the test cycles and based on the weighting values contained in EN12053. Specification data is based on VDI 2198, with the following configuration: Complete truck with 3000mm 2-stage limited free lift mast, standard carriage and 1070mm forks, overhead guard and standard pneumatic drive and steer tyres.

Specifications Table GP35UX

	1.2	MODEL DESIGNATION		GP35UX	GP35UX	GP35UX	GP35UX	GDP35UX
General	1.1	Manufacturer		Yale	Yale	Yale	Yale	Yale
	1.2.1	Engine		Yanmar 3.0L	Yanmar 3.3L	Yanmar 2.2L	Yanmar 2.2L	Xinchai 2.67L
	1.2.2	CE compliance / Emission standards		non-certified	non-certified	non-certified	non-certified	non-certified
	1.3	Drive: electric(battery or mains), diesel, petrol, fuel gas		DIESEL	DIESEL	LPG	Bi-Fuel	DIESEL
	1.4	Operator type: hand, pedestrian, standing, seated, order-picker		Seated	Seated	Seated	Seated	Seated
	1.5	Rated capacity/rated load	Q (kg)	3500	3500	3500	3500	3500
	1.6	Load Center Distance	c (mm)	500	500	500	500	500
	1.8	Load Face - Fork Face STD Carriage (mm)	x (mm)	510	510	510	510	510
	1.9	Wheelbase (mm)	y (mm)	1700	1700	1700	1700	1700
Weight	2.1	Service weight	kg	4710	4710	4710	4710	4710
	2.2	Axle loading, laden front/rear	kg	7250 / 960	7250 / 960	7250 / 960	7250 / 960	7250
	2.3	Axle loading, unladen front/rear	kg	1690 / 3020	1690 / 3020	1690 / 3020	1690 / 3020	1690
Wheels	3.1	Tyres: L = pneumatic, V = cushion, SE = superelastic		L	L	L	L	L
	3.2	Tire Size, Front		28x9-15-14PR	28x9-15-14PR	28x9-15-14PR	28x9-15-14PR	28x9-15-14PR
	3.3	Tire Size, Rear		6.50-10-10PR	6.50-10-10PR	6.50-10-10PR	6.50-10-10PR	6.50-10-10PR
	3.5	Wheels, Number Front/Rear (x=drive wheels)		2X/2	2X/2	2X/2	2X/2	2X/2
	3.6	Standard Tread Width, Front (mm)	b10 (mm)	1000	1000	1000	1000	1000
	3.7	Standard Tread Width, Rear (mm)	b11 (mm)	970	970	970	970	970
Dimensions	4.1	Tilt of mast/fork carriage, forward /backward	α /β (°)	6/ 12	6/ 12	6/ 12	6/ 12	6/ 12
	4.2	2LFL Mast Lowered (mm)	h1 (mm)	2150	2150	2150	2150	2150
	4.3	2LFL Free Lift - BOF (mm)	h2 (mm)	165	165	165	165	165
	4.4	2LFL Lift - BOF (mm)	h3 (mm)	3000	3000	3000	3000	3000
	4.5.1	Height Mast Extended w/o LBR (mm)	h4 (mm)	3700	3700	3700	3700	3700
	4.7	Height of overhead guard (high/low)	h6 (mm)	2205	2205	2205	2205	2205
	4.7.1	Height of Enclosed Cab (mm)	mm	2230	2230	2230	2230	2230
	4.8	Seat height/stand height(SIP from Ground - Standard (mm))	h7 (mm)	1192	1192	1192	1192	1192
	4.12	Coupling Height from Ground (mm)	h10 (mm)	260	260	260	260	260
	4.19	Overall Length (mm)	l1 (mm)	3850	3850	3850	3850	3850
	4.20	Length to Face of Forks Standard Carriage (mm)	l2 (mm)	2780	2780	2780	2780	2780
	4.21	Overall Width STD Tire (mm)	b1 (mm)	1210	1210	1210	1210	1210
	4.21.1	Overall Width Dual Tire (mm)		1650	1650	1650	1650	1650
	4.22	04.2201 - Fork Thickness	s(mm)	50	50	50	50	50
	4.22	04.2202 - Fork Width	e(mm)	122	122	122	122	IIIA
	4.22	04.2203 - ForkLength	l(mm)	1070	1070	1070	1070	1100
	4.23	Fork carriage ISO 2328. Class/type, A/B		IIIA	IIIA	IIIA	IIIA	140
	4.24	Fork Carriage Width	b3 (mm)	1100	1100	1100	1100	170
	4.31	Ground clearance, laden, below mast	m1 (mm)	140	140	140	140	4210
	4.32	Ground clearance, centre of wheelbase	m2 (mm)	170	170	170	170	4010
	4.34.1	Aisle width with pallets 1000mm x 1200mm crossways (l6 x b12)	Ast (mm)	4210	4210	4210	4210	2500
	4.34.2	Aisle width with pallets 800mm x 1200mm crossways (l6 x b12)	Ast (mm)	4010	4010	4010	4010	830
	4.35	04.3500 - Outside Turning Radius	Wa (mm)	2500	2500	2500	2500	19/20
	4.36	04.3600 - Internal Turing Radius	b13 (mm)	830	830	830	830	0.34/0.36
Performance	5.1	Travel speed, laden/unladen	km/h	19/20	19/20	19/19	19/19	0.45/0.38
	5.2	Lifting speed, laden/unladen,2LFL	mm/s	0.38/0.40	0.38/0.40	0.40/0.43	0.40/0.43	16560/16560
	5.3	Lowering speed laden/unladen, 2LFL	mm/s	0.45/0.38	0.45/0.38	0.40/0.38	0.40/0.38	16.5/24

	1.2	MODEL DESIGNATION		GP35UX	GP35UX	GP35UX	GP35UX	GDP35UX
	5.5	Maximum drawbar pull with/without load	N	16870/9676	17739/9870	22710/20915	20910/19260	12/16.5
	5.7.2	Gradeability with/without load @ 4.8km/h	%	10.9/19	13/19	15/20	15/20	5.91/4.91
	5.8	Max Gradeability Lade/Unladen	%	17/25	tbc	20/22	20/22	Hydraulic
	5.9.1	Acceleration Time Laden/Unladen 15m	s	5.91/4.91	4.8/4.2	tbc	tbc	Xinchai 2.67L
	5.10	Service Brake		Hydraulic	Hydraulic	Hydraulic	Hydraulic	36,8
Combustion Engine	7.1	Engine		Yanmar 3.0L	Yanmar 3.3L	Yanmar 4TN88GN-NHYM	Yanmar 4TN88BN-NHYM	2500
	7.2	Engine Power	Kw	35,5	42,1	41,7	LPG：38.9/GAS：38.7	4 / 2670
	7.3	Rated Speed	min-1	2400	2300	2500	2500	tbc
	7.4	Number of cylinders	n/cm3	4 / 3319	4 / 3319	4 / 2189	4 / 2189	0-175
	7.5	Fuel Consumption according to VDI cycle	kg/h	3,86	4,9	tbc	tbc	64
Additional Data	10.1	Operating Pressure of Attachments	bar	0-175	0-175	0-175	0-175	70
	10.2	Oil Volume Flow for Attachements	ℓ/min	64	64	64	64	70
	10.3	Hydraulic Oil Tank Capacity - Initial Fill	ℓ	70	70	70	70	84
	10.4.2	Fuel Tank Capacity	ℓ	70	70	70	70	PIN
	10.7.1	Sound Pressure at Driver's Ear OHG	dBa	83	88,5	tbc	tbc	
	10.8	Towing Couple Type		PIN	PIN	PIN	PIN	

(4.5.1) Without load backrest.
(4.7) h6 subject to +/- 5mm tolerance.
(4.8) Full suspension seat in depressed position.
(4.24) Add 32mm with load backrest.
(10.2) Variable.
(10.7.1) LPAZ, measured according to the test cycles and based on the weighting values contained in EN12053. Specification data is based on VDI 2198, with the following configuration: Complete truck with 3000mm 2-stage limited free lift mast, standard carriage and 1070mm forks, overhead guard and standard pneumatic drive and steer tyres.

GP20UX 2000kg Capacities @ 500mm LOAD CENTRE

MAST TYPE	MAXIMUM FORK HEIGHT (MM)	LOWERED HEIGHT (MM)	EXTENDED HEIGHT WITH LBR (MM)	EXTENDED HEIGHT WITHOUT LBR (MM)	FREE LIFT HEIGHT WITHOUT LBR	BACK TILT	CAPACITY WITH PSS TYRES WITHOUT SIDESHIFT (KG)	CAPACITY WITH PSS TYRES WITH SIDESHIFT (KG)	CAPACITY WITH PNEUMATIC TYRES WITHOUT SIDESHIFT (KG)	CAPACITY WITH PNEUMATIC TYRES WITH SIDESHIFT (KG)
2 STAGE LIMITED FREE LIFT (LFL) MAST	3000	2010	3990	3575	160	12	2000	2000	2000	2000
	3300	2160	4290	3875	160	12	2000	2000	2000	2000
	3700	2360	4690	4275	160	6	2000	2000	2000	2000
	4000	2560	4990	4575	160	6	2000	2000	2000	2000
3 STAGE FULL FREE LIFT (FFL) MAST	4500	2060	5490	5017	1440	6	1900	1830	1830 / 1900	1770 / 1830
	4800	2160	5790	5317	1540	6	1840	1770	1710 / 1830	1650/ 1770
	5500	2425	6490	6017	1800	6	1400 / 1670	1350 / 1610	1110 / 1660	1040 / 1600
	6000	2610	6990	6517	1990	6	1100 / 1530	1040 / 1480	850 / 1520	790 / 1470
	6500	2825	7490	7017	2215	6	780 / 1390	710 / 1340	610 / 1380	540 / 1330

Cell with / = Single/Dual tread

GP20UX 2000kg Capacities @ 600mm LOAD CENTRE

MAST TYPE	MAXIMUM FORK HEIGHT (MM)	LOWERED HEIGHT (MM)	EXTENDED HEIGHT WITH LBR (MM)	EXTENDED HEIGHT WITHOUT LBR (MM)	FREE LIFT HEIGHT WITHOUT LBR	BACK TILT	CAPACITY WITH PSS TYRES WITHOUT SIDESHIFT (KG)	CAPACITY WITH PSS TYRES WITH SIDESHIFT (KG)	CAPACITY WITH PNEUMATIC TYRES WITHOUT SIDESHIFT (KG)	CAPACITY WITH PNEUMATIC TYRES WITH SIDESHIFT (KG)
2 STAGE LIMITED FREE LIFT (LFL) MAST	3000	2010	3990	3575	160	12	1800	1800	1800	1800
	3300	2160	4290	3875	160	12	1800	1800	1800	1800
	3700	2360	4690	4275	160	6	1800	1800	1800	1800
	4000	2560	4990	4575	160	6	1800	1800	1800	1800
3 STAGE FULL FREE LIFT (FFL) MAST	4500	2060	5490	5017	1440	6	1710 / 1730	1650 / 1670	1710 / 1730	1650 / 1670
	4800	2160	5790	5317	1540	6	1650 / 1670	1600 / 1610	1650 / 1660	1590 / 1610
	5500	2425	6490	6017	1800	6	1400 / 1510	1350 / 1460	1110 / 1510	1040 / 1460
	6000	2610	6990	6517	1990	6	1100 / 1390	1040 / 1340	850 / 1380	790 / 1330
	6500	2825	7490	7017	2215	6	780 / 1260	710 / 1220	610 / 1250	540 / 1210

Cell with / = Single/Dual tread

GP25UX 2500kg Capacities @ 500mm LOAD CENTRE

MAST TYPE	MAXIMUM FORK HEIGHT (MM)	LOWERED HEIGHT (MM)	EXTENDED HEIGHT WITH LBR (MM)	EXTENDED HEIGHT WITHOUT LBR (MM)	FREE LIFT HEIGHT WITHOUT LBR	BAC K TILT	CAPACITY WITH PSS TYRES WITHOUT SIDESHIFT (KG)	CAPACITY WITH PSS TYRES WITH SIDESHIFT (KG)	CAPACITY WITH PNEUMATIC TYRES WITHOUT SIDESHIFT (KG)	CAPACITY WITH PNEUMATIC TYRES WITH SIDESHIFT (KG)
2 STAGE LIMITED FREE LIFT (LFL) MAST	3000	2010	3990	3575	160	12	2500	2500	2500	2500
	3300	2160	4290	3875	160	12	2500	2500	2500	2500
	3700	2360	4690	4275	160	6	2500	2500	2500	2500
	4000	2560	4990	4575	160	6	2500	2500	2500	2500
3 STAGE FULL FREE LIFT (FFL) MAST	4500	2060	5490	5017	1440	6	2340	2260	2020 / 2340	1950 / 2260
	4800	2160	5790	5317	1540	6	2270	2190	1890 / 2260	1830 / 2190
	5500	2425	6490	6017	1800	6	1710 / 2080	1650 / 2010	1280 / 2070	1210 / 2000
	6000	2610	6990	6517	1990	6	1410 / 1930	1350 / 1870	1010 / 1920	950 / 1860
	6500	2825	7490	7017	2215	6	1120 / 1770	1050 / 1710	740 / 1760	660 / 1700

Cell with / = Single/Dual tread

GP25UX 2500kg Capacities @ 600mm LOAD CENTRE

MAST TYPE	MAXIMUM FORK HEIGHT (MM)	LOWERED HEIGHT (MM)	EXTENDED HEIGHT WITH LBR (MM)	EXTENDED HEIGHT WITHOUT LBR (MM)	FREE LIFT HEIGHT WITHOUT LBR	BAC K TILT	CAPACITY WITH PSS TYRES WITHOUT SIDESHIFT (KG)	CAPACITY WITH PSS TYRES WITH SIDESHIFT (KG)	CAPACITY WITH PNEUMATIC TYRES WITHOUT SIDESHIFT (KG)	CAPACITY WITH PNEUMATIC TYRES WITH SIDESHIFT (KG)
2 STAGE LIMITED FREE LIFT (LFL) MAST	3000	2010	3990	3575	160	12	2300	2300	2300	2300
	3300	2160	4290	3875	160	12	2300	2300	2300	2300
	3700	2360	4690	4275	160	6	2300	2300	2300	2300
	4000	2560	4990	4575	160	6	2300	2300	2300	2300
3 STAGE FULL FREE LIFT (FFL) MAST	4500	2060	5490	5017	1440	6	2110	2040	1990 / 2100	1920 / 2040
	4800	2160	5790	5317	1540	6	2040	1980	1870 / 2040	1810 / 1980
	5500	2425	6490	6017	1800	6	1710 / 1870	1650 / 1810	1280 / 1870	1210 / 1810
	6000	2610	6990	6517	1990	6	1410 / 1740	1350 / 1680	1010 / 1730	950 / 1670
	6500	2825	7490	7017	2215	6	1120 / 1600	1050 / 1550	740 / 1580	660 / 1530

Cell with / = Single/Dual tread

GP30UX 3000kg Capacities @ 500mm LOAD CENTRE

MAST TYPE	MAXIMUM FORK HEIGHT (MM)	LOWERED HEIGHT (MM)	EXTENDED HEIGHT WITH LBR (MM)	EXTENDED HEIGHT WITHOUT LBR (MM)	FREE LIFT HEIGHT WITHOUT LBR	BACK TILT	CAPACITY WITH PSS TYRES WITHOUT SIDESHIFT (KG)	CAPACITY WITH PSS TYRES WITH SIDESHIFT (KG)	CAPACITY WITH PNEUMATIC TYRES WITHOUT SIDESHIFT (KG)	CAPACITY WITH PNEUMATIC TYRES WITH SIDESHIFT (KG)
2 STAGE LIMITED FREE LIFT (LFL) MAST	3000	2075	4100	3640	165	12	3000	3000	3000	3000
	3300	2225	4400	3940	165	12	3000	3000	3000	3000
	3700	2425	4800	4340	165	6	3000	3000	3000	3000
	4000	2625	5100	4640	165	6	3000	3000	3000	2930
3 STAGE FULL FREE LIFT (FFL) MAST	4500	2125	5600	5100	1525	6	2790	2710	2680 / 2790	2630 / 2710
	4800	2225	5900	5400	1625	6	2720	2640	2610 / 2710	2550 / 2630
	5500	2490	6600	6100	1880	6	2190 / 2520	2140 / 2450	1860 / 2510	1800 / 2430
	6000	2675	7100	6600	2075	6	1630 / 2360	1580 / 2290	1280 / 2340	1210 / 2260
	6500	2890	7600	7100	2260	6	1220 / 2200	1150 / 2130	820 / 2140	740 / 2080

Cell with / = Single/Dual tread

GP30UX 3000kg Capacities @ 600mm LOAD CENTRE

MAST TYPE	MAXIMUM FORK HEIGHT (MM)	LOWERED HEIGHT (MM)	EXTENDED HEIGHT WITH LBR (MM)	EXTENDED HEIGHT WITHOUT LBR (MM)	FREE LIFT HEIGHT WITHOUT LBR	BACK TILT	CAPACITY WITH PSS TYRES WITHOUT SIDESHIFT (KG)	CAPACITY WITH PSS TYRES WITH SIDESHIFT (KG)	CAPACITY WITH PNEUMATIC TYRES WITHOUT SIDESHIFT (KG)	CAPACITY WITH PNEUMATIC TYRES WITH SIDESHIFT (KG)
2 STAGE LIMITED FREE LIFT (LFL) MAST	3000	2075	4100	3640	165	12	2900	2810	2900	2810
	3300	2225	4400	3940	165	12	2890	2800	2890	2800
	3700	2425	4800	4340	165	6	2880	2790	2850	2760
	4000	2625	5100	4640	165	6	2840	2770	2770	2700
3 STAGE FULL FREE LIFT (FFL) MAST	4500	2125	5600	5100	1525	6	2530	2450	2520	2450
	4800	2225	5900	5400	1625	6	2460	2390	2450	2380
	5500	2490	6600	6100	1880	6	2190 / 2280	2140 / 2210	1860 / 2270	1800 / 2200
	6000	2675	7100	6600	2075	6	1630 / 2140	1580 / 2070	1280 / 2120	1210 / 2060
	6500	2890	7600	7100	2260	6	1220 / 1990	1150 / 1930	820 / 1970	740 / 1910

Cell with / = Single/Dual tread

GP35UX 3500kg Capacities @ 500mm LOAD CENTRE

MAST TYPE	MAXIMUM FORK HEIGHT (MM)	LOWERED HEIGHT (MM)	EXTENDED HEIGHT WITH LBR (MM)	EXTENDED HEIGHT WITHOUT LBR (MM)	FREE LIFT HEIGHT WITHOUT LBR	BACK TILT	CAPACITY WITH PSS TYRES WITHOUT SIDESHIFT (KG)	CAPACITY WITH PSS TYRES WITH SIDESHIFT (KG)	CAPACITY WITH PNEUMATIC TYRES WITHOUT SIDESHIFT (KG)	CAPACITY WITH PNEUMATIC TYRES WITH SIDESHIFT (KG)
2 STAGE LIMITED FREE LIFT (LFL)	3000	2150	4100	3700	170	12	3500	3500	3500	3500

MAST TYPE	MAXIMUM FORK HEIGHT (MM)	LOWERED HEIGHT (MM)	EXTENDED HEIGHT WITH LBR (MM)	EXTENDED HEIGHT WITHOUT LBR (MM)	FREE LIFT HEIGHT WITHOUT LBR	BACK TILT	CAPACITY WITH PSS TYRES WITHOUT SIDESHIFT (KG)	CAPACITY WITH PSS TYRES WITH SIDESHIFT (KG)	CAPACITY WITH PNEUMATIC TYRES WITHOUT SIDESHIFT (KG)	CAPACITY WITH PNEUMATIC TYRES WITH SIDESHIFT (KG)
MAST										
	3300	2300	4400	4000	170	12	3500	3500	3500	3500
	3700	2500	4800	4400	170	6	3500	3500	3500	3440 / 3490
	4000	2700	5100	4700	170	6	3500	3500	3310 / 3490	3240 / 3400
3 STAGE FULL FREE LIFT (FFL) MAST	4500	2200	5600	5140	1560	6	3270	3180	2870 / 3260	2820 / 3180
	4800	2300	5900	5440	1660	6	3090 / 3190	3030 / 3100	2630 / 3180	2580 / 3100
	5500	2565	6600	6140	1915	6	2350 / 2980	2300 / 2900	1920 / 2950	1860 / 2880
	6000	2750	7100	6640	2110	6	1880 / 2810	1840 / 2740	1450 / 2690	1390 / 2640
	6500	2965	7600	7100	2290	6	1410 / 2580	1360 / 2530	920 / 2250	870 / 2200

Cell with / = Single/Dual tread

GP35UX 3500kg Capacities @ 600mm LOAD CENTRE

MAST TYPE	MAXIMUM FORK HEIGHT (MM)	LOWERED HEIGHT (MM)	EXTENDED HEIGHT WITH LBR (MM)	EXTENDED HEIGHT WITHOUT LBR (MM)	FREE LIFT HEIGHT WITHOUT LBR	BACK TILT	CAPACITY WITH PSS TYRES WITHOUT SIDESHIFT (KG)	CAPACITY WITH PSS TYRES WITH SIDESHIFT (KG)	CAPACITY WITH PNEUMATIC TYRES WITHOUT SIDESHIFT (KG)	CAPACITY WITH PNEUMATIC TYRES WITH SIDESHIFT (KG)
2 STAGE LIMITED FREE LIFT (LFL) MAST	3000	2150	4100	3700	170	12	3430	3340	3430	3340
	3300	2300	4400	4000	170	12	3420	3330	3400	3310
	3700	2500	4800	4400	170	6	3390	3300	3260 / 3300	3190 / 3220
	4000	2700	5100	4700	170	6	3330 / 3300	3230 / 3220	3070 / 3210	3020 / 3130
3 STAGE FULL FREE LIFT (FFL) MAST	4500	2200	5600	5140	1560	6	2970 / 2950	2890 / 2880	2820 / 2950	2770 / 2880
	4800	2300	5900	5440	1660	6	2900 / 2880	2820 / 2810	2600 / 2880	2550 / 2800
	5500	2565	6600	6140	1915	6	2330 / 2690	2280 / 2630	1900 / 2690	1850 / 2620
	6000	2750	7100	6640	2110	6	1880 / 2540	1840 / 2480	1450 / 2530	1390 / 2460
	6500	2965	7600	7100	2290	6	1410 / 2380	1360 / 2320	920 / 2230	870 / 2170

Cell with / = Single/Dual tread
all 500mm Loadcenter ratings with Forks of 1070 mm
all 600mm Loadcenter ratings with Forks of 1220mm

OPTIONS TABLE

Available Options - EMEA

DESCRIPTION	STANDARD	OPTIONAL
PERFORMANCE	**STD**	**OPT**
Yanmar 2.2L LPG/ Dual Fuel		X
Yanmar 3.3L diesel engine - GP30-35UX	X	
Yanmar 2.6L, 3.0L and 3.3L Diesel - Stage IIIA		X
Serpentine Radiator	X	
Horizontal Exhaust	X	
Upswept Exhaust		X
High Air Intake	X	
High Air Intake with Precleaner		X
Powershift - 1 Speed Transmission	X	
Drum brakes	X	
DRIVE	**STD**	**OPT**
Standard Tread	X	
Wide Tread		X
Dual Tread		X
7.00 x 12-12 Super Elastic Drive Tyres (Standard Tread) - GP20-25UX		X
7.00 x 12-12 PR Pneumatic Drive Tyres (Standard Tread) - GP20-25UX	X	
7.00 x 12-12 Super Elastic Non-Marking Drive Tyres (Standard Tread) - GP20-25UX		X
28 x 9-15-12 Super Elastic Drive Tyres (Standard Tread) - GP30-35UX		X
28 x 9-15-12 PR Pneumatic Drive Tyres (Standard Tread) - GP30-35UX	X	
28 x 9-15-12 Super Elastic Non-Marking Drive Tyres (Standard Tread) - GP30-35UX		X
7.00 x 12-12 PR Pneumatic Drive Tyres (Dual Tread) - GP20-25UX		X
7.00 x 12-12 Super Elastic Drive Tyres (Dual Tread) - GP20-25UX		X
28 x 9-15-12 Super Elastic Drive Tyres (Dual Tread) - GP30-35UX		X
28 x 9-15-12 PR Pneumatic Drive Tyres (Dual Tread) - GP30-35UX		X
6.00 x 9-10 Super Elastic Steer Tyres - GP20-25UX		X
6.00 x 9-10 Super Elastic Steer Tyres - GP20-25UX	X	
6.00 x 9-10 Super Elastic Non-Marking Steer Tyres - GP20-25UX		X
6.50 x 10-10 Super Elastic Steer Tyres - GP30-35UX		X
6.50 x 10-10 Pneumatic Steer Tyres - GP30-35UX	X	
6.50 x 10-10 Super Elastic Non-Marking Steer Tyres - GP30-35UX		X
LIFT	**STD**	**OPT**
2 Stage Limited Free Lift	X	
3 Stage Full Free Lift		X
3000mm 2 Stage Limited Free Lift Mast (2010mm Lowered Height)		X
3000mm 2 Stage Limited Free Lift Mast (2075mm Lowered Height)	X	
3000mm 2 Stage Limited Free Lift Mast (2150mm Lowered Height)	X	
3300mm 2 Stage Limited Free Lift Mast (2160mm Lowered Height)	X	
3300mm 2 Stage Limited Free Lift Mast (2225mm Lowered Height)		X
3300mm 2 Stage Limited Free Lift Mast (2300mm Lowered Height)		X
3700mm 2 Stage Limited Free Lift Mast (2360mm Lowered Height)		X
3700mm 2 Stage Limited Free Lift Mast (2425mm Lowered Height)		X
3700mm 2 Stage Limited Free Lift Mast (2500mm Lowered Height)		X
4500mm 3 Stage Full Free Lift Mast (2060mm Lowered Height)		X
4500mm 3 Stage Full Free Lift Mast (2125mm Lowered Height)		X
4500mm 3 Stage Full Free Lift Mast (2200mm Lowered Height)		X
4800mm 3 Stage Full Free Lift Mast (2160mm Lowered Height)		X
4800mm 3 Stage Full Free Lift Mast (2225mm Lowered Height)		X

DESCRIPTION	STANDARD	OPTIONAL
4800mm 3 Stage Full Free Lift Mast (2300mm Lowered Height)		X
5500mm 3 Stage Full Free Lift Mast (2425mm Lowered Height)		X
5500mm 3 Stage Full Free Lift Mast (2490mm Lowered Height)		X
5500mm 3 Stage Full Free Lift Mast (2565mm Lowered Height)		X
Mast tilt - 6° Forward / 6° Back	X	
Mast tilt - 6° Forward / 12° Back		X
HANDLING	**STD**	**OPT**
Manual lever hydraulic controls	X	
Mechanical lever hydraulic controls, designed for clamping applications		X
2 Function (0 Auxiliary) Hydraulic Valve	X	
3 Function (1 Auxiliary) Hydraulic Valve		X
4 Function (2 Auxiliary) Hydraulic Valve		X
3 Function Hose Group (1 Auxiliary)		X
3 Function Hose Group (1 Auxiliary)		X
4 Function Hose Group (2 Auxiliary)		X
4 Function Hose Group (2 Auxiliary)		X
Attachment Extension Tubes - 1 Pair		X
1038mm Class II Hook Type Carriage - GP20-25UX	X	
1100mm Hook Type Carriage - GP30-35UX	X	
1040mm Hook Type Integral Sideshift Carriage - GP20-25UX		X
1100mm Class III Hook Type Integral Side Shift Carriage - GP30-35UX		X
1200mm Class II Hook Type Carriage		X
940mm Load Backrest - GP20-25UX	X	
1080mm Load Backrest - GP30-35UX	X	
40 x 122 x 1070mm Hook Type Standard Tapered Forks - GP20-25UX	X	
40 x 122 x 1220mm Hook Type Standard Tapered Forks - GP20-25UX		X
45 x 122 x 1070mm Hook Type Standard Tapered Forks - GP30UX	X	
45 x 122 x 1220mm Hook Type Standard Tapered Forks - GP30UX		X
50 x 122 x 1070mm Hook Type Standard Taper Forks - GP35UX	X	
50 x 122 x 1220mm Hook Type Standard Taper Forks - GP35UX		X
CAB	**STD**	**OPT**
Cab with Heater		X
Cab without Heater		X
Front & Top Cab Panels		X
Front, Top & Rear Cab Panels		X
Rain Cover for Overhead Guard		X
Dual Mirrors Side View		X
Rear Drive Handle with Horn Button		X
ERGONOMICS	**STD**	**OPT**
2120mm Low Overhead Guard - GP20-25UX	X	
2145mm Low Overhead Guard - GP30-35UX	X	
2180mm High Overhead Guard - GP20-25UX		X
Non Suspension Vinyl Seat	X	
Full Suspension Vinyl Seat (SC29)		X
Full Suspension Vinyl Seat (SC29) with Switch for OPS	X	
Standard Seat Belt	X	
Steering wheel with spinner knob	X	
Directional Lever	X	
VISIBILITY	**STD**	**OPT**
LED work lights	X	
2 Front LED Work Lights with Stop, Tail, Indicator & Reverse Lights	X	
2 Front and 1 Rear LED Work Lights with Stop, Tail, Indicator & Reverse Lights	X	
APPEARANCE	**STD**	**OPT**
Yale yellow paint base truck	X	

DESCRIPTION	STANDARD	OPTIONAL
Special paint base truck		X
SUPPLEMENTAL	**STD**	**OPT**
Literature package	X	
Parts Manual	X	
Warranty: 12 Months / 2,000 Hours Manufacturers Warranty (Parts Only)	X	

COMPANY INFORMATION

Yale Lift Truck Technologies

HYSTER-YALE UK LIMITED trading as Yale Lift Truck Technologies.
Registered in England and Wales. Company Registration Number: 02636775. Registered Address: Centennial House, Building 4.5, Frimley Business Park, Frimley, Surrey, GU16 7SG, United Kingdom.
yale.com

SAFETY: Yale® products sold into EU countries, UK, and Turkey conform to applicable EU, UK, and Turkey legislation (including Machinery Directive 2006/42/EC) and are CE marked. Yale products sold into other countries may be ordered in conformance with EU requirements and will likewise be CE marked.
NOTICE: Care must be exercised when operating material handling equipment. Operators must be trained and must read, understand and follow the instructions contained in the operating manual. Products may be shown with optional equipment and/or features not available in all regions. Product performance may be affected by its condition, how it is equipped and the application. Specifications are subject to change without notice. Consult your Yale® Dealer if any of the information shown is critical to your application.

© 2026 Hyster-Yale Materials Handling, Inc., all rights reserved. YALE and YALE LOGO are trademarks of Hyster-Yale Materials Handling, Inc.